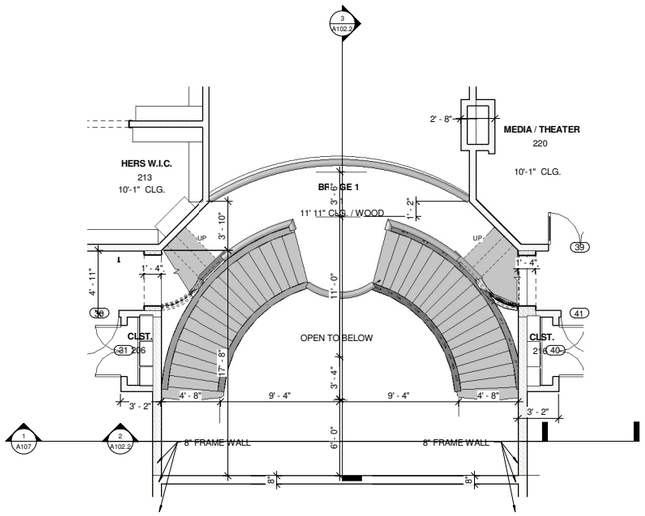

1 Stair Plan
1/4" = 1'-0"

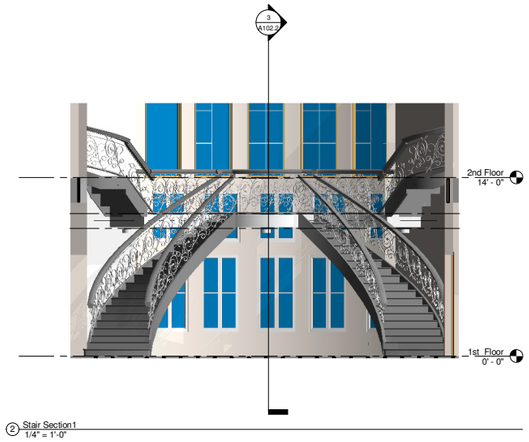

2 Stair Section1
1/4" = 1'-0"

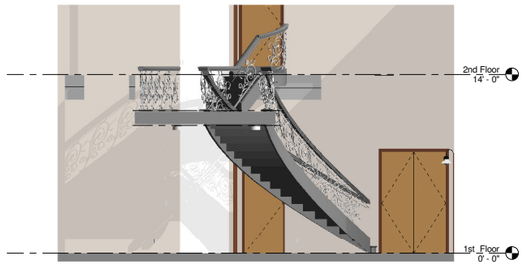

3 Stair Section2
1/4" = 1'-0"

Indsys Computers
E-150, 2nd Floor,
Greater Kailash-2,
New Delhi-110 048
Tel.:011-41637036

www.indsyscomputers.com

Consultant
Address
Address
Address
Phone

Consultant
Address
Address
Address
Phone

Consultant
Address
Address
Address
Phone

Consultant
Address
Address
Address
Phone

Consultant
Address
Address
Address
Phone

No.	Description	Date

Owner

RESIDENCE

Stair Plan & Section

Project Number
Date
Drawn By
Checked By

A102.2

7/11/2007 3:26:10 PM